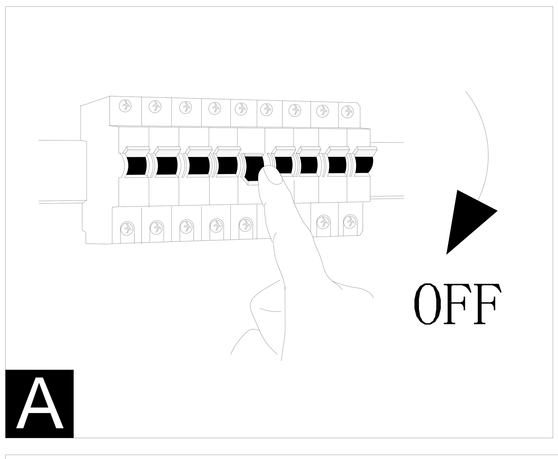

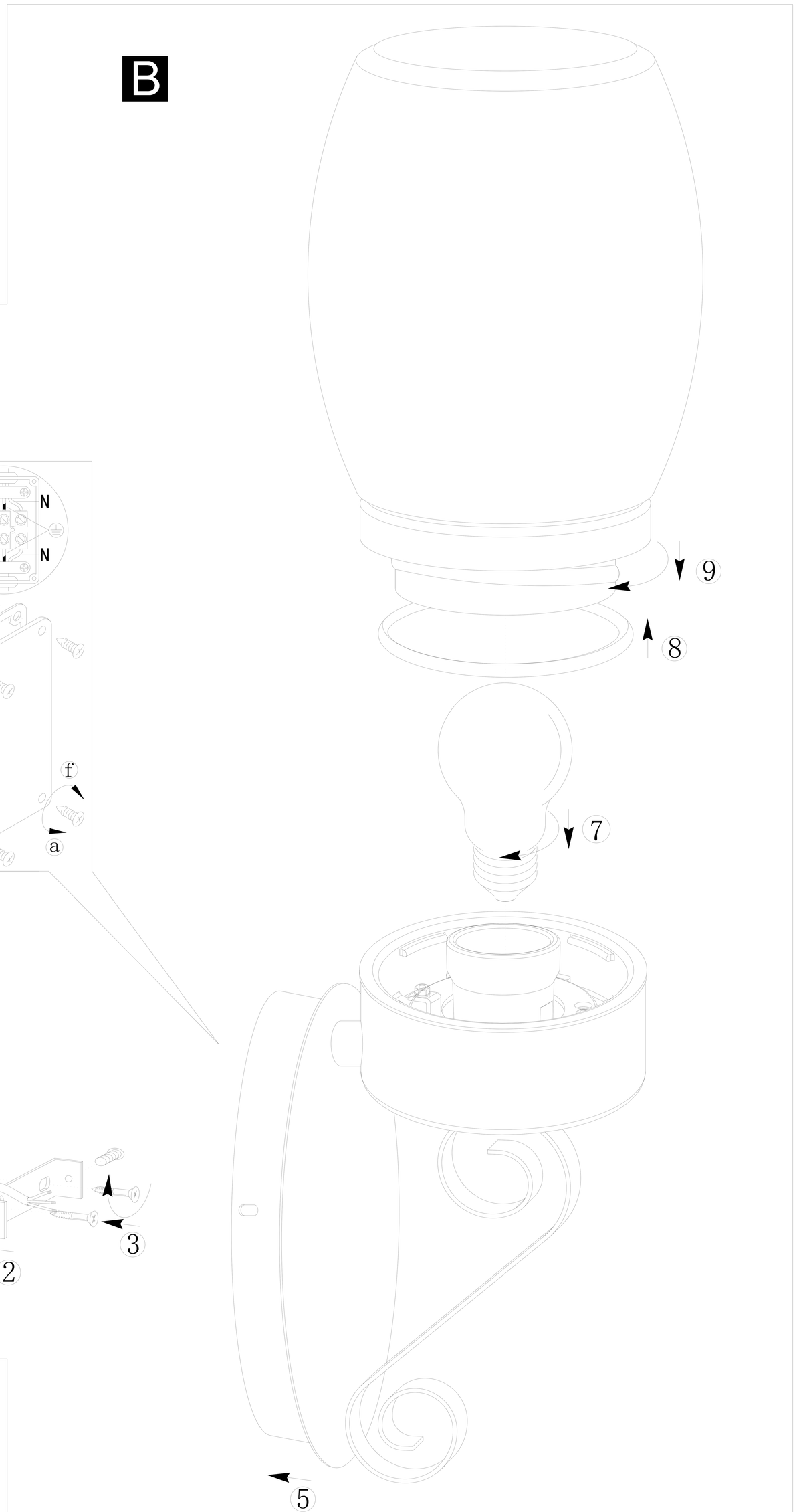

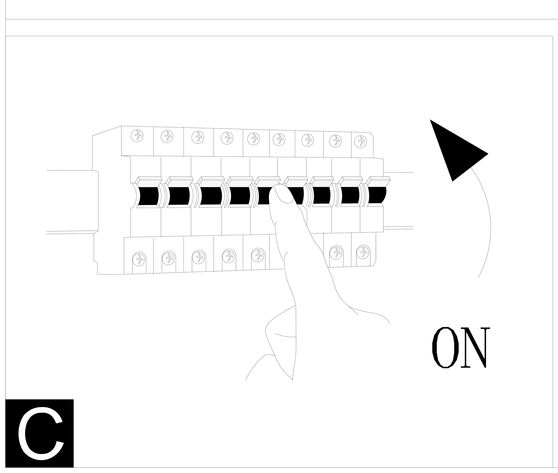

BLA91704